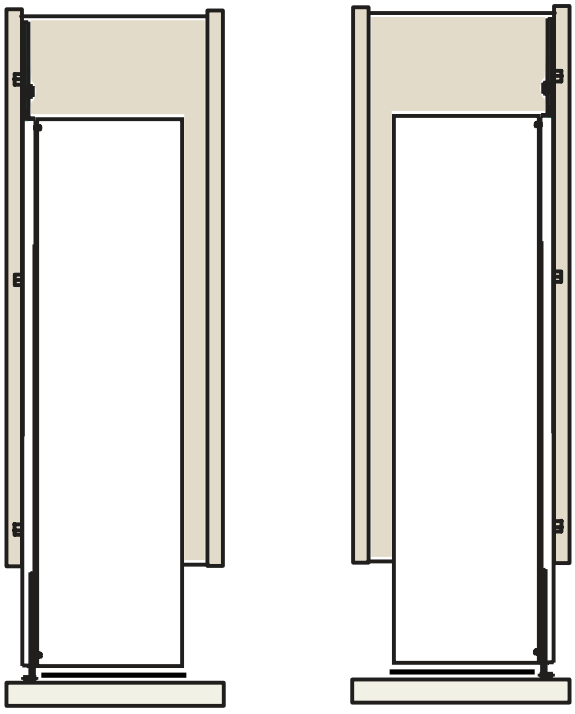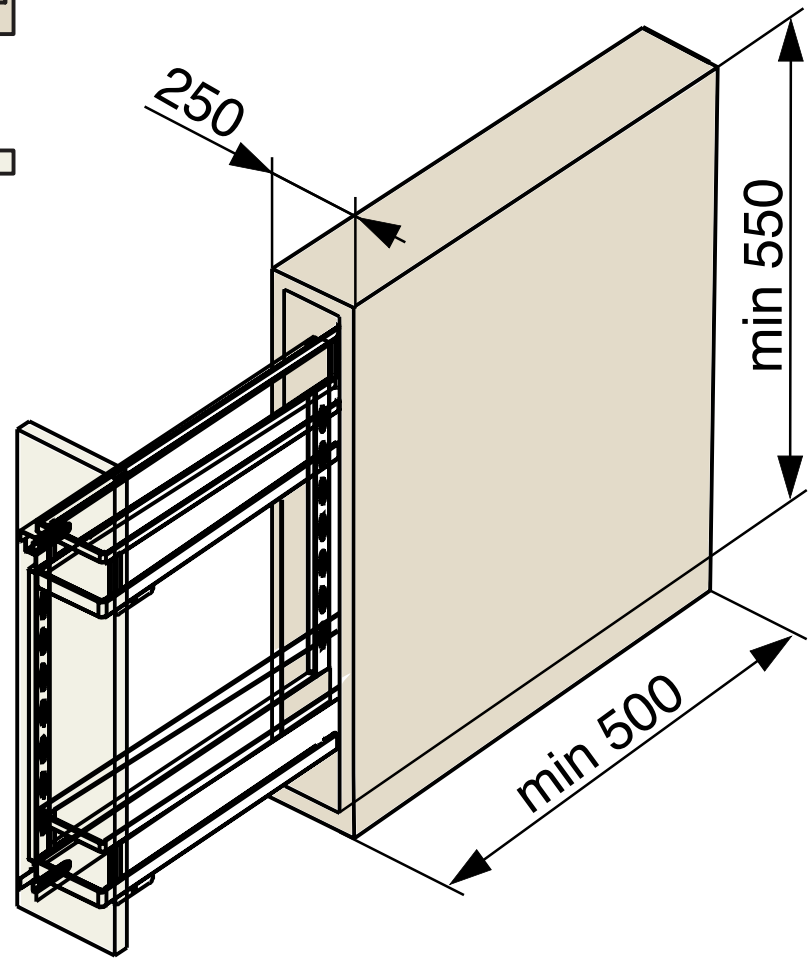LEFT RIGHT